Downtown Contempo Faucet with Round Escutcheons & Low Contempo Lever Handles & Fully Polished & Plated Pop-Up Drain

JACLO
Confidence from start to finish.™

Model #: 8882-T632-836-

FEATURES:

- All brass 8" - 12" widespread faucet includes brass pop-up drain with fully polished & plated overflow
- $^1/_4$ turn ceramic valves
- Low Profile Swivel Spout (For Stationary Spout option, contact JACLO)
- Available Flow Rates: 1.5, 1.2 & 0.5 GPM. Additional flow rate (aerator) options available. Contact JACLO.
- 5 $^3/_4$" spout reach
- Spout Hole Size: 1 $^1/_2$" - 1 $^7/_8$"
- Valve Hole Size: 1 $^1/_8$" - 1 $^5/_8$"
- ADA Compliant Levers

AVAILABLE FINISHES:

Polished Chrome (PCH)	Satin Chrome (SC)	Bronze Umber (BU)
Satin Nickel (SN)	Pewter (PEW)	Caramel Bronze (CB)
Polished Nickel (PN)	Antique Brass (AB)	Antique Copper (ACU)
Oil-Rubbed Bronze (ORB)	Polished Brass (PB)	Polished Copper (PCU)
Vintage Bronze (VB)	Satin Brass (SB)	Matte Black (MBK)
Satin Gold (SG)	Polished Gold (PG)	Black Nickel (BKN)
Bombay Gold (BG)	Jewelers Gold (JG)	Europa Bronze (EB)
White (WH)	Sedona Beige (SDB)	Tristan Brass (TB)
Unlacquered Brass (ULB)	Satin Cooper (SCU)	

SPECIFICATION DRAWING:

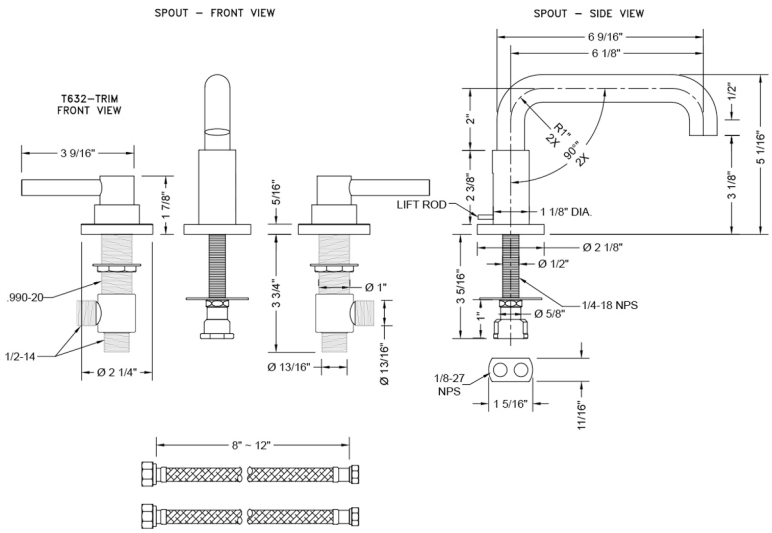

AVAILABLE HANDLES:

COMPLIANCES:

Complies with: ASME A112.18.1-2012/CSA B125.1-12